TKP-FIT

Fabricated Fittings
Full Pressure EDR

QUALITY SYSTEM CERTIFICATION
DNV·GL
ISO 9001

CONDUCTING OUR
CLIENTS NEEDS

TKP Inc. is the international commercial Technical and Marketing division of Fluidos Industriales Mexicanos – FIMEX.

FIMEX - TKP is an ISO 9001-2015 QMS certified manufacture with corporate offices and manufacturing facility in Monterrey, Mexico. FIMEX has been in the Plastics and Geomembrane industries for over 25 years serving the Mexican and US markets.

Our Polyethylene Pipe facility is equipped with some of the most modern and up to date extrusion lines in North America with multi-layer and striping capabilities to meet various industry's needs. Our fabricated fittings facility utilizes some of the world's highest precision fabrication equipment for miter and saddle fusion to supply standard fittings and custom fusion of manifolds.

TKP's Engineering and Technical staff has over 100 years of experience in the thermal plastics industries serving North America.

TKP is committed to continued development of new products to solve industry needs such at the new TKP-TR temperature resistant pipe for various applications and the TKP-AR abrasion resistant pipe to help in those difficult applications to extent the life of the pipe and reduce cost of shut downs.

DNV·GL

MANAGEMENT SYSTEM CERTIFICATE

Certificate No: 10000293689-MSC-RvA-MEX
Initial certification date: 05 June 2020
Valid: 05 June 2020 - 04 June 2023

This is to certify that the management system of

Fluidos Industriales Mexicanos, S.A. de C.V. FIMEX (Planta TKP)
AV. TECNOLOGICO # 483, COL. MONTERREY TECHNOLOGY PARK; CIÉNEGA DE FLORES, C.P. 65550, MONTERREY, NUEVO LEÓN, Mexico

has been found to conform to the Quality Management System standard:
ISO 9001:2015

This certificate is valid for the following scope:
Manufacture of Polyethylene (PE) Pipe and Fittings.

Place and date:
Ciudad de México, 05 June 2020

The RvA is a signatory to the IAF MLA

For the issuing office:
DNV GL – Business Assurance
Av. Insurgentes Sur 859, Piso 7, Col. Nápoles, C.P. 03810, Ciudad de México, Mexico

Mauricio Venturin
Management Representative

Lack of fulfilment of conditions as set out in the Certification Agreement may render this Certificate invalid.
ACCREDITED UNIT: DNV GL Business Assurance B.V., Zwolseweg 1, 2994 LB, Barendrecht, Netherlands. TEL:+31(0)102922689.
www.dnvgl.com/assurance

COMPANY WITH QUALITY SYSTEM CERTIFIED BY DNV GL
ISO 9001

QUALITY CERTIFICATIONS & LABORATORY

TKP Inc. commitment is to approach our clients to know your needs and satisfy them with products that comply with the requirements of functionality and quality, seeking to improve continually our performance, achieving the growth of our organization.

We offer our PE-4710 pipe, included in the **TR4 of the PPI (Plastic Pipe Institute)**, supported by our excellent allies and suppliers of the best resins available on the market. TKP piping and fittings meet applicable standards for operation in the United States.

Our Quality system complies with the **ISO-9001: 2015** standard.

The pipe is manufactured according to the general use standards for different applications:

We are using a resin that complies with **ASTM D3350.**

We manufacture pipe under these standards:

- **ASTM F714**
- **ASTM D 3035**
- **ASTM F 2619**
- **AWWA C 906**
- **NSF 14/61**
- **ASTM F 2206**

NSF International
789 N. Dixboro Road, Ann Arbor, MI 48105 USA

RECOGNIZES

Fluidos Industriales Mexicanos S.A. de C.V.
Facility: Nuevo León, México

AS COMPLYING WITH NSF/ANSI/CAN 14, 61 AND ALL APPLICABLE REQUIREMENTS. PRODUCTS APPEARING IN THE NSF OFFICIAL LISTING ARE AUTHORIZED TO BEAR THE NSF MARK.

This certificate is the property of NSF International and must be returned upon request. This certificate remains valid as long as this client has products in Listing for the referenced mandatds. For the most current and complete Listing information, please access NSF's website (www.nsf.com).

May 19, 2020
Certificate# C0106060 - 02

David Parkins
Vice President, Global Water Division

CERTIFICATION OF COMPLIANCE
NSF/ANSI/CAN 14, 61

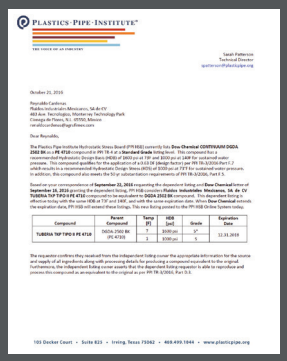

PLASTICS·PIPE·INSTITUTE

Sarah Patterson
Technical Director
spatterson@plasticspipe.org

October 21, 2016

Respaldo Cardenas
Fluidos Industriales Mexicanos, SA de CV
403 Alex Tecnológico, Monterrey Technology Park
Cienega de Flores, N.L. 65550, Mexico
ceradicos@sgcdfmex.com

Dear Respaldo,

The Plastics Pipe Institute Hydrostatic Stress Board (PPI HSB) currently lists **Dow Chemical CONTINUUM DGDA-2502 BK** as a **PE 4710** compound in PPI TR-4 at a **Standard Grade** listing level. This compound has a recommended Hydrostatic Design Basis (HDB) of 1600 psi at 73F and 1000 psi at 140F for sustained water pressure. This compound qualifies for the application of a 0.5 DF (design factor) per PPI TR-3/2016 Part C.2 which results in a recommended Hydrostatic Design Stress (HDS) of 800 psi at 73F for sustained water pressure. In addition, this compound also meets the 50 yr substantiation requirements of PPI TR-3/2016, Part B.5.

Based on your correspondence of **September 21, 2016** requesting the dependent listing and **Dow Chemical** letter of **September 16, 2016** proving the dependent listing, PPI HSB considers **Fluidos Industriales Mexicanos, SA de CV TUBERIA TAP TIPO-5 PE 4710** compound to be equivalent to **DGDA-2502 BK** compound. This dependent listing is valid for the same grade, color, UV, and HDB as the **DGDA-2502 BK** compound. This dependent listing extends the expiration date, PPI HSB will extend these listings. This new listing posted to the PPI HSB Online System today.

Compound	Parent Compound	Temp (F)	HDB (psi)	Grade	Expiration Date
TUBERIA TAP TIPO-5 PE 4710	DGDA-2502 BK (PE 4710)	73	1600 psi	5*	12.31.2019
		2	1000 psi	5	

The requester confirms they received from the independent listing owner the appropriate information for the source and supply of all ingredients along with processing details for producing a compound equivalent to the original. Furthermore, the independent listing owner asserts that the dependent listing requester is able to reproduce and process this compound as an equivalent to the original as per PPI TR-3/2016, Part D.5.

101 Decker Court • Suite 825 • Irving, Texas 75062 • 469.499.1044 • www.plasticspipe.org

PIPE PE-4710 INCLUDED IN THE
TECHNICAL REPORT 4 (TR-4)
OF THE PLASTIC PIPE INSTITUTE

In addition, our manufacturing plant in Monterrey Mexico, has a laboratory equipped to verify the qualities of our products:

-
- **Density**
- **Flow index**
- **Tensile strength**
- **Content of Carbon Black**
  Hydrostatic pressure resistance

INDEX

1.- FABRICATED FITTINGS:

1.1.- ELBOW OF 22.5 ° SHORT RADIUS 2
1.2.- ELBOW 45 ° SHORT RADIUS 3
1.3.- ELBOW 45 ° LONG RADIUS 4
1.4.- ELBOW 90 ° SHORT RADIUS 5
1.5.- ELBOW OF 90 ° LONG RADIUS 6
1.6.- WYES 45 ° 7
1.7.- TEES 8
1.8.- BRANCH SADDLES ..... 9 - 11
1.9.- FABRICATED CONCENTRICAL REDUCTION ..... 12 - 14
1.10.- PIECES UPON REQUEST 15
ANNEX I.- TKP PIPE PE-47107PE100, DR 7 - DR 15.5 16
ANNEX II.- TKP PIPE PE-4710 / PE100, DR 17 - DR 41 17

1.- FULL PRESSURE FABRICATED FITTINGS

- COMPUTERIZED CONTROL OF THE WELDING PROCESS:
TKP uses manufacturing tables with the most modern technology, which have a system with the most advanced computerized controls of the variables of temperature, pressure and fusion times.

EDR- FULL PRESSURE-FABRICATED FITTINGS:

All the fittings in this catalog are EDR designed and produced, base in ASTM F 2206 standard, so they can be fused to the pipe and work full pressure according to its DR.
The fittings in the EDR system are manufactured in a different DR, with a thicker wall, and the tips are rectified to the thickness (DR) of the pipe, tha allows an efficient butt fusion, leaving the rest of the body of the piece thick enough to afford the full pressure of the DR of the pipe.

SECTION	DESCRIPTION	LONG RADIUS	SHORT RADIUS
1.1	ELBOW OF 22.5°		✓
1.2,1.3	ELBOW OF 45°	✓	✓
1.4,1.5	ELBOW OF 90°	✓	✓
1.6	WYES 45°	NA	NA
1.7	TEES	NA	NA
1.8	BRANCH SADDLES	NA	NA
1.9	MANUFACTURED REDUCTIONS	NA	NA

TABLE 1.- PRESSURE RATING PE-4710 (PSI),
AWWA C906: ASTM F714
PRESSURE FITTINGS FULL PRESSURE (EDR)

EDR 7	335
EDR 9	250
EDR 11	200
EDR 13.5	160
EDR 17	125
VALID FOR WATER @73°F	

OUR EQUIPMENT HAS AN AUTOMATIC DATA RECORDER THAT CAN GENERATE REPORTS FOR EACH FUSION AND ALLOWS FULL TRACEABILITY.

ELBOW 22.5° - Short Radius

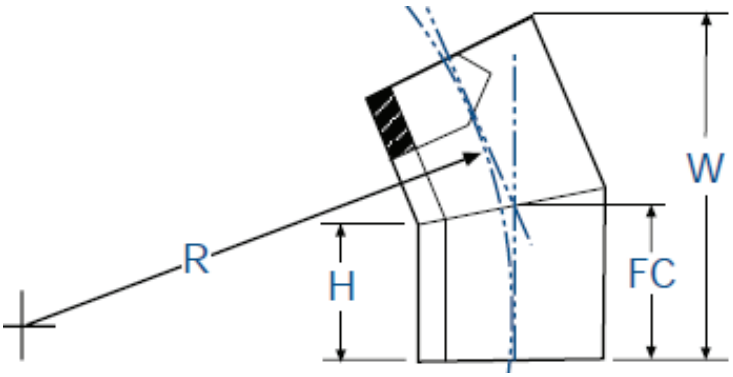

SIZE	OUTSIDE DIAMETER	DIMENSIONS				
		R	H	FC	W	EDR*
8	8.625	15	6.5	7.625	12.62	7
10	10.75	17.25	6.5	7.625	16.62	7
12	12.75	19.5	8	9.25	20.27	7
14	14	21	8	9.375	20.75	9
16	16	24	8	9.625	21.51	7
18	18	27	8	9.75	22.28	9
20	20	30	8	10	23.04	9
22	22	33	8	10.25	23.81	9
24	24	36	8	10.375	24.58	9
28	28	42	14	16.75	37.65	11
30	30	45	14	17	38.41	11
36	36	54	14	17.625	40.71	13.5
40	40	63	21	25.125	56.47	13.5

*NOTE: EDR RECORDED IS THE THICKER WE OFFER; FOR EXAMPLE: EDR 11 MEANS THE PIECE WAS MADE WITH DR 9 PIPE, THEREFORE , THINNER EDR'S ARE ALSO AVAILABLE
YOU CAN CONSULT THE ACTUAL WALL THICKNESS FOR EACH SIZE IN THE ANNEX i AND II, PLEASE REMEMBER
FOR AN EDR 9 YOU MUST CONSULT THE DR 7; EDR 11 CONSULT DR 9 PIPE WALL THICKNESS.
OTHER DR´s OR DIAMETERS NOT INCLUDED, PLEASE CONTACT OUR TKP SALES REPRESENTATIVE

ELBOW 45° - Short Radius

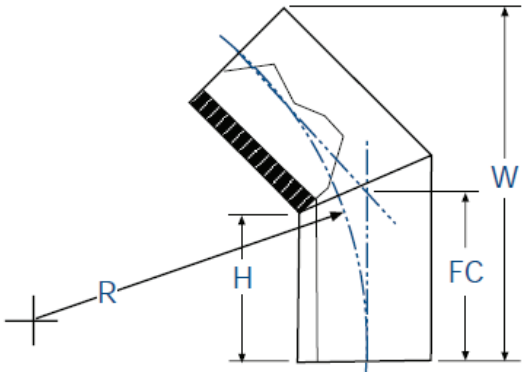

SIZE	OUTSIDE DIAMETER	DIMENSIONS				
		R	H	FC	W	EDR*
6	6.625	12.625	6.625	6	12	9
8	8.625	12	6.5	7.625	16	7
10	10.75	12.63	6.5	8.73	18.7	7
12	12.75	13.63	8.5	11.14	23.53	7
14	14	14.25	8.5	11.4	24.41	9
16	16	15.25	8.5	11.81	25.82	7
18	18	16.25	8.5	12.23	27.24	9
20	20	17.25	8.5	12.64	28.65	9
22	22	23.1	8.5	13.05	30	9
24	24	24.1	8.5	13.5	31.5	9
28	28	28.5	10	15.8	36.875	11
30	30	30.5	10	16.2	38.31	11
36	36	43	10	17.5	42.5	13.5
40	40	50	16	24.7	57	13.5
42	42	50	16	24.7	57	17
48	48	58	16	25.9	61.25	17

*NOTE: EDR RECORDED IS THE THICKER WE OFFER; FOR EXAMPLE: EDR 11 MEANS THE PIECE WAS MADE WITH DR 9 PIPE, THEREFORE , THINNER EDR'S ARE ALSO AVAILABLE
YOU CAN CONSULT THE ACTUAL WALL THICKNESS FOR EACH SIZE IN THE ANNEX i AND II, PLEASE REMEMBER FOR AN EDR 9 YOU MUST CONSULT THE DR 7; EDR 11 CONSULT DR 9 PIPE WALL THICKNESS.
OTHER DR´s OR DIAMETERS NOT INCLUDED, PLEASE CONTACT OUR TKP SALES REPRESENTATIVE

ELBOW 45° - Long Radius

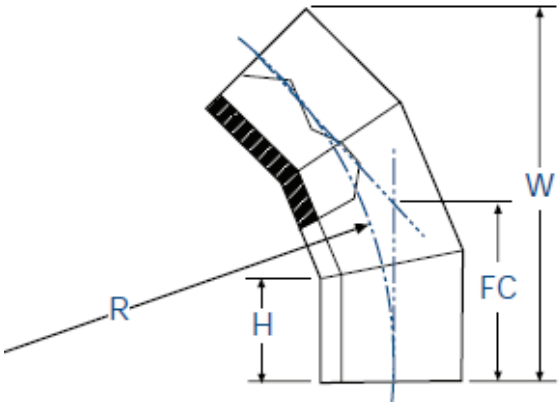

SIZE	OUTSIDE DIAMETER	DIMENSIONS				
		R	H	FC	W	EDR*
3	3.5	13.625	4	7.25	13.69	9
4	4.5	14.25	5	8.5	16.1	9
6	6.625	15.25	6	10	19.3	9
8	8.625	15	6.5	11.25	20	7
10	10.75	17.25	6.5	11.25	23.09	7
12	12.75	26.5	8	15	30.06	7
14	14	21	8	13.875	28.64	9
16	16	24	8	14.75	30.74	7
18	18	27	8	15.625	33.08	9
20	20	30	8	16.5	35.19	9
22	22	33	8	17.25	37.3	9
24	24	36	8	18.25	39.4	9
26	26	39	14	25	51.84	11
28	28	42	14	25.88	54.09	11
30	30	45	14	26.625	56.2	11
32	32	48	14	27.5	58.31	11
36	36	54	14	29.22	62.52	13.5
42	42	63	21	38.75	81.02	17
48	48	72	21	41.25	87.37	17

*NOTE: EDR RECORDED IS THE THICKER WE OFFER; FOR EXAMPLE: EDR 11 MEANS THE PIECE WAS MADE WITH DR 9 PIPE, THEREFORE , THINNER EDR'S ARE ALSO AVAILABLE
YOU CAN CONSULT THE ACTUAL WALL THICKNESS FOR EACH SIZE IN THE ANNEX i AND II, PLEASE REMEMBER FOR AN EDR 9 YOU MUST CONSULT THE DR 7; EDR 11 CONSULT DR 9 PIPE WALL THICKNESS.
OTHER DR´s OR DIAMETERS NOT INCLUDED, PLEASE CONTACT OUR TKP SALES REPRESENTATIVE

ELBOW 90° - Short Radius

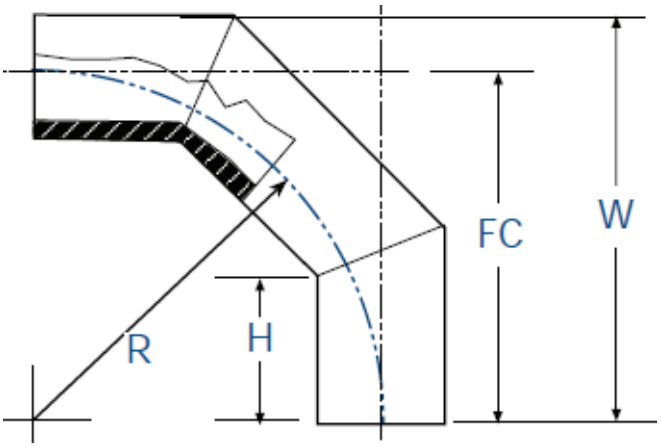

SIZE	OUTSIDE DIAMETER	DIMENSIONS				
		R	H	FC	W	EDR*
8	8.625	11.63	6.5	11.25	19	7
10	10.75	12.63	6.5	16.13	21.5	7
12	12.75	13.63	8.5	19.12	25.5	7
14	14	14.25	8.5	19.75	26.75	9
16	16	15.25	8.5	20.75	28.75	7
18	18	16.25	8.5	21.75	30.75	9
20	20	17.25	8.5	22.75	32.75	9
22	22	23.07	8.5	26.57	37.57	9
24	24	24.07	8.5	27.57	39.57	9
26	26	26.5	10	30.9	43.9	11
28	28	28.5	10	32.5	46.5	11
30	30	30.5	10	34.1	49.1	11
36	36	43	10	42.6	60.6	13.5
40	40	50	16	54	75	13.5
42	42	50	16	54	75	17
48	48	58	16	59.9	83.9	17

*NOTE: EDR RECORDED IS THE THICKER WE OFFER; FOR EXAMPLE: EDR 11 MEANS THE PIECE WAS MADE WITH DR 9 PIPE, THEREFORE , THINNER EDR'S ARE ALSO AVAILABLE
YOU CAN CONSULT THE ACTUAL WALL THICKNESS FOR EACH SIZE IN THE ANNEX i AND II, PLEASE REMEMBER
FOR AN EDR 9 YOU MUST CONSULT THE DR 7; EDR 11 CONSULT DR 9 PIPE WALL THICKNESS.
OTHER DR´s OR DIAMETERS NOT INCLUDED, PLEASE CONTACT OUR TKP SALES REPRESENTATIVE

ELBOW 90° - Long Radius

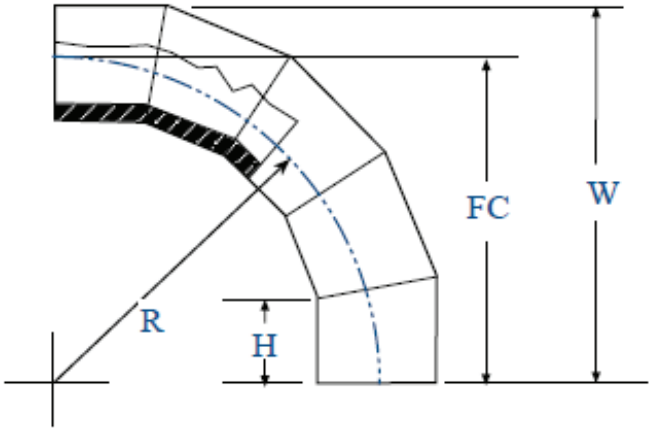

SIZE	OUTSIDE DIAMETER	DIMENSIONS				
		R	H	FC	W	EDR*
3	3.5	13.63	4	15.25	17	9
4	4.5	14.25	5	16.875	19.13	9
6	6.625	15.25	6	16.88	20.19	9
8	8.625	16.25	6.5	20.13	24.70	7
10	10.75	17.25	6.5	21.38	26.75	7
12	12.75	23.69	6.88	24.88	33.5	7
14	14	23.31	6.5	26.56	33.563	9
16	16	24	8	28.88	36.88	7
18	18	27.88	7.5	31.63	40.63	9
20	20	30	9	40	48	9
22	22	33	8	36.63	47.63	9
24	24	34.88	9.13	39.5	51.5	9
26	26	39	14	47.875	60.88	11
28	28	42	14	50.38	64.38	11
30	30	45	14	53	68	11
36	36	54	14	60.88	78.88	13.5
40	40	63	21	75	95.6	13.5
42	42	63	21	75.03	96.63	17
48	48	72	21	83.5	107.5	17

*NOTE: EDR RECORDED IS THE THICKER WE OFFER; FOR EXAMPLE: EDR 11 MEANS THE PIECE WAS MADE WITH DR 9 PIPE, THEREFORE , THINNER EDR'S ARE ALSO AVAILABLE
YOU CAN CONSULT THE ACTUAL WALL THICKNESS FOR EACH SIZE IN THE ANNEX i AND II, PLEASE REMEMBER
FOR AN EDR 9 YOU MUST CONSULT THE DR 7; EDR 11 CONSULT DR 9 PIPE WALL THICKNESS.
OTHER DR´s OR DIAMETERS NOT INCLUDED, PLEASE CONTACT OUR TKP SALES REPRESENTATIVE

WYES 45°

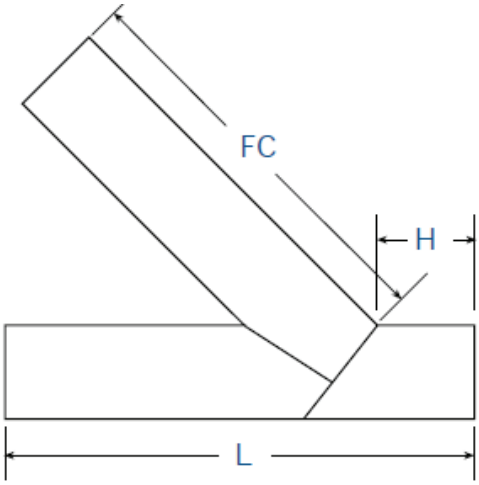

OUTSIDE DIAMETER	DIMENSIONS			
	L	H	FC	EDR*
6.625	71.2	20	51.2	9
8.625	71.2	20	51.2	7
10.75	71.2	20	51.2	7
12.75	71.2	20	51.2	7
14	73.2	20	53.15	9
16	73.2	20	53.15	7
18	73.2	20	53.15	9
20	75.1	20	55.12	9
22	75.1	20	55.12	9
24	75.1	20	55.12	9

*NOTE: EDR RECORDED IS THE THICKER WE OFFER; FOR EXAMPLE: EDR 11 MEANS THE PIECE WAS MADE WITH DR 9 PIPE, THEREFORE , THINNER EDR'S ARE ALSO AVAILABLE
YOU CAN CONSULT THE ACTUAL WALL THICKNESS FOR EACH SIZE IN THE ANNEX i AND II, PLEASE REMEMBER FOR AN EDR 9 YOU MUST CONSULT THE DR 7; EDR 11 CONSULT DR 9 PIPE WALL THICKNESS.
OTHER DR´s OR DIAMETERS NOT INCLUDED, PLEASE CONTACT OUR TKP SALES REPRESENTATIVE

TEES

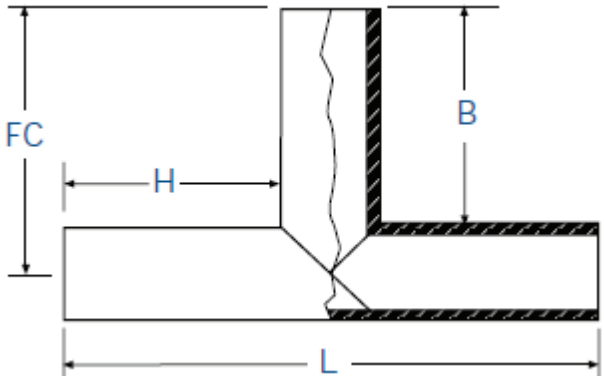

SIZE	OUTSIDE DIAMETER	DIMENSIONS				
		L	H	FC	B	EDR*
6	6.625	45	19.69	24	19.69	9
8	8.625	48	19.69	24	19.69	7
10	10.75	48	18.63	24	18.63	7
12	12.75	48	17.63	24	17.63	7
14	14	48	17	24	17	9
16	16	48	16	24	16	7
18	18	48	15	24	15	9
20	20	48	14	24	14	9
22	22	48	13	24	13	9
24	24	48	12	24	14	9
28	28	136	54	68	54	11
30	30	142	56	71	56	11
36	36	156	60	77	59	13.5
40	40	164	62	80	59	13.5
42	42	166	62	80	59	17
48	48	176	64	83	59	17

*NOTE: EDR RECORDED IS THE THICKER WE OFFER; FOR EXAMPLE: EDR 11 MEANS THE PIECE WAS MADE WITH DR 9 PIPE, THEREFORE , THINNER EDR'S ARE ALSO AVAILABLE
YOU CAN CONSULT THE ACTUAL WALL THICKNESS FOR EACH SIZE IN THE ANNEX i AND II, PLEASE REMEMBER FOR AN EDR 9 YOU MUST CONSULT THE DR 7; EDR 11 CONSULT DR 9 PIPE WALL THICKNESS.
OTHER DR´s OR DIAMETERS NOT INCLUDED, PLEASE CONTACT OUR TKP SALES REPRESENTATIVE

BRANCH SADDLES

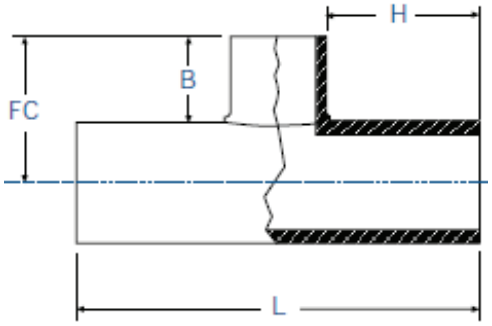

SIZE	DIAMETRO EXTERIOR	DIMENSIONES				
		L	H	FC	B	EDR*
8 x 4	8.625 x 4.5	24	9	10.25	5.938	9
10 x 3	10.75 x 3.5	24	9.5	9.625	4.25	9
10 x 4	10.75 x 4.5	24	9	11.375	6	9
10 x 6	10.75X6.625	28	9.8125	13.375	8	9
12 X 3	12.75 X 3.5	24	9.5	10.625	4.25	9
12 X 4	12.75 X 4.5	24	9	12.375	6	9
12 X 6	12.75 X 6.625	28	9.8125	14.375	8	9
12 X 8	12.75 X 8.625	30	9.875	14.625	8.25	9
12 X 10	12.75 X 10.75	30	8.75	12.875	6.5	9
14 X 3	14 X 3.5	24	9.5	11.25	4.25	9
14 X 4	14 X 4.5	24	9	13	6	9
14 X 6	14 X 6.625	28	9.813	15	8	9
14 X 8	14 X 8.625	30	9.875	15.25	8.25	9
14 X 10	14 X 10.75	30	8.75	13.5	6.25	9
14 X 12	14 X 12.75	30	8.75	13.5	6.25	9
16 X 3	16 X 3.5	24	9.5	12.25	4.25	9
16 X 4	16 X 4.5	24	9	14	6	9
16 X 6	16 X 6.625	28	9.813	16	8	9
16 X 8	16 X 8.625	30	9.875	16.25	8.25	9
16 X 10	16 X 10.75	30	8.75	14.5	6.5	9
16 X 12	16 X 12.75	32	8.6	16.5	8.5	9
16 X 14	16 X 14	32	8.6	16.5	8.5	9
18 X 3	18 X 3.5	24	9.5	13.25	4.25	9
18 X 4	18 X 4.5	24	9	15	6	9
18 X 6	18 X 6.625	28	9.813	17	8	9

*NOTE: EDR RECORDED IS THE THICKER WE OFFER; FOR EXAMPLE: EDR 11 MEANS THE PIECE WAS MADE WITH DR 9 PIPE, THEREFORE , THINNER EDR'S ARE ALSO AVAILABLE
YOU CAN CONSULT THE ACTUAL WALL THICKNESS FOR EACH SIZE IN THE ANNEX i AND II, PLEASE REMEMBER FOR AN EDR 9 YOU MUST CONSULT THE DR 7; EDR 11 CONSULT DR 9 PIPE WALL THICKNESS.
OTHER DR´s OR DIAMETERS NOT INCLUDED, PLEASE CONTACT OUR TKP SALES REPRESENTATIVE

BRANCH SADDLES

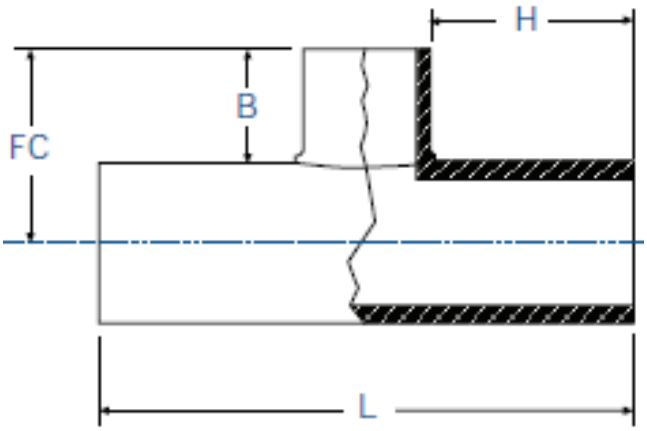

SIZE	OUTSIDE DIAMETER	DIMENSIONS				
		L	H	FC	B	EDR
18 X 8	18 X 8.625	30	9.875	17.25	8.25	9
18 X 10	18 X 10.75	30	8.75	15.5	6.5	9
18 X 12	18 X 12.75	32	8.6	17.5	8.5	9
18 X 14	18 X 14	32	8.6	17.5	8.5	9
18 X 16	18 x 16	36	8.5	25	15	9
20 X 3	20 X 3.5	28	9.81	15.125	5.125	9
20 X 4	20 X 4.5	28	9.81	15.125	5.125	9
20 X 6	20 X 6.625	28	9.81	15.125	5.125	9
20 X 8	20 X 8.625	30	9.88	17	7	9
20 X 10	20 X 10.75	30	8.75	16.5	6.5	9
20 X 12	20 X 12.75	32	8.6	17.5	7.5	9
20 X 14	20 X 14	32	8.6	17.5	7.5	9
24 X 3	24 X 3.5	28	9.81	17.125	5.125	9
24 X 4	24 X 4.5	28	9.81	17.125	5.125	9
24 X 6	24 X 6.625	28	9.81	17.125	5.125	9
24 X 8	24 X 8.625	30	9.88	19	7	9
24 X 10	24 X 10.75	30	8.75	18.5	6.5	9
24 X 12	24 X 12.75	32	8.6	19.5	7.5	9

*NOTE: EDR RECORDED IS THE THICKER WE OFFER; FOR EXAMPLE: EDR 11 MEANS THE PIECE WAS MADE WITH DR 9 PIPE, THEREFORE , THINNER EDR'S ARE ALSO AVAILABLE
YOU CAN CONSULT THE ACTUAL WALL THICKNESS FOR EACH SIZE IN THE ANNEX i AND II, PLEASE REMEMBER FOR AN EDR 9 YOU MUST CONSULT THE DR 7; EDR 11 CONSULT DR 9 PIPE WALL THICKNESS.
OTHER DR´s OR DIAMETERS NOT INCLUDED, PLEASE CONTACT OUR TKP SALES REPRESENTATIVE

BRANCH SADDLES

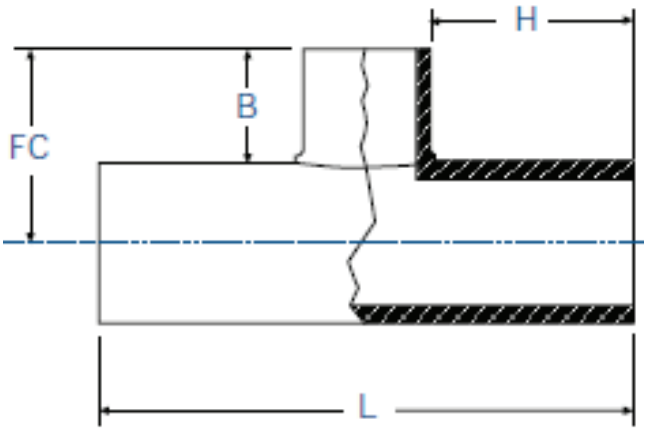

SIZE	OUTSIDE DIAMETER	DIMENSIONS				
		L	H	FC	B	EDR
30 X 3	30 X 3.5	48	19.81	20.125	5.125	11
30 X 4	30 X 4.5	48	19.81	20.125	5.125	11
30 X 6	30 X 6.625	48	19.81	20.125	5.125	11
30 X 8	30 X 8.625	48	18.88	22	7	11
30 X 10	30 X 10.75	48	17.75	21.5	6.5	11
30 X 12	30 X 12.75	48	16.6	22.5	7.5	11
30 X 14	30 X 14	48	14.5	30	15	11
36 X 3	36 X 3.5	48	19.813	23.125	5.125	13.5
36 X 4	36 X 4.5	48	19.813	23.125	5.125	13.5
36 X 6	36 X 6.625	48	19.813	23.125	5.125	13.5
36 X 8	36 X 8.625	48	16.6	25.5	7.5	13.5
36 X 10	36 X 10.75	48	16.6	28.5	7.5	13.5
36 X 12	36 X 12.75	48	16.6	28.5	7.5	13.5
36 X 14	36 X 14	48	16.6	25.5	7.5	13.5

*NOTE: EDR RECORDED IS THE THICKER WE OFFER; FOR EXAMPLE: EDR 11 MEANS THE PIECE WAS MADE WITH DR 9 PIPE, THEREFORE , THINNER EDR'S ARE ALSO AVAILABLE
YOU CAN CONSULT THE ACTUAL WALL THICKNESS FOR EACH SIZE IN THE ANNEX i AND II, PLEASE REMEMBER FOR AN EDR 9 YOU MUST CONSULT THE DR 7; EDR 11 CONSULT DR 9 PIPE WALL THICKNESS.
OTHER DR´s OR DIAMETERS NOT INCLUDED, PLEASE CONTACT OUR TKP SALES REPRESENTATIVE

CONCENTRIC REDUCTION

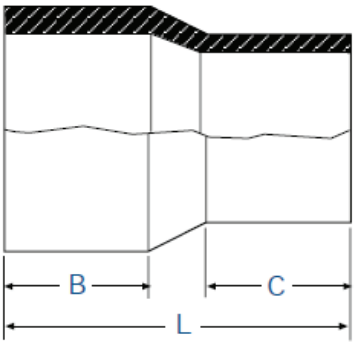

SIZE	OUTSIDE DIAMETER	DIMENSIONS			
		L	B	C	EDR
48" x 42"	48" x 42"	36	16.5	16.5	17
42" x 40"	42" x 40"	36	16.5	16.5	17
40" x 36"	40" x 36"	23	10	10	17
36" x 34"	36" x 34"	19	8	8	13.5
36" x 32"	36" x 32"	19	8	8	13.5
36" x 30"	36" x 30"	19	8	8	13.5
36" x 28"	36" x 28"	19	8	8	13.5
36" x 26"	36" x 26"	19	8	8	13.5
36" x 24"	36" x 24"	19	8	8	13.5
36" x 20"	36" x 20"	19	8	8	13.5
36" x 18"	36" x 18"	19	8	8	13.5
34" x 32"	34" x 32"	19	8	8	13.5
34" x 30"	34" x 30"	19	8	8	13.5
34" x 28"	34" x 28"	19	8	8	13.5
34" x 26"	34" x 26"	19	8	8	13.5
34" x 24"	34" x 24"	19	8	8	13.5
34" x 20"	34" x 20"	19	8	8	13.5
34" x 18"	34" x 18"	19	8	8	13.5
32" x 30"	32" x 30"	19	8	8	13.5
32" x 28"	32" x 28"	19	8	8	11
32" x 26"	32" x 26"	19	8	8	11
32" x 24"	32" x 24"	19	8	8	11
32" x 20"	32" x 20"	19	8	8	11
32" x 18"	32" x 18"	19	8	8	11
32" x 16"	32" x 16"	19	8	8	11
30" x 28"	30" x 28"	19	8	8	11

*NOTE: EDR RECORDED IS THE THICKER WE OFFER; FOR EXAMPLE: EDR 11 MEANS THE PIECE WAS MADE WITH DR 9 PIPE, THEREFORE , THINNER EDR'S ARE ALSO AVAILABLE
YOU CAN CONSULT THE ACTUAL WALL THICKNESS FOR EACH SIZE IN THE ANNEX i AND II, PLEASE REMEMBER FOR AN EDR 9 YOU MUST CONSULT THE DR 7; EDR 11 CONSULT DR 9 PIPE WALL THICKNESS.
OTHER DR´s OR DIAMETERS NOT INCLUDED, PLEASE CONTACT OUR TKP SALES REPRESENTATIVE

CONCENTRIC REDUCTION

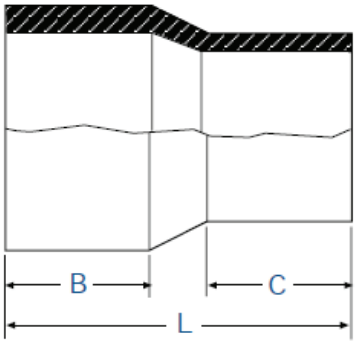

SIZE	OUTSIDE DIAMETER	DIMENSIONS			
		L	B	C	EDR
32" x 24"	32" x 24"	19	8	8	11
32" x 20"	32" x 20"	19	8	8	11
32" x 18"	32" x 18"	19	8	8	11
32" x 16"	32" x 16"	19	8	8	11
30" x 28"	30" x 28"	19	8	8	11
30" x 26"	30" x 26"	19	8	8	11
30" x 24"	30" x 24"	19	8	8	11
30" x 20"	30" x 20"	19	8	8	11
30" x 18"	30" x 18"	19	8	8	11
30" x 16"	30" x 16"	19	8	8	11
28" x 24"	28" x 24"	19	8	8	11
28" x 20"	28" x 20"	19	8	8	11
28" x 18"	28" x 18"	19	8	8	11
28" x 16"	28" x 16"	19	8	8	11
28" x 14"	28" x 14"	19	8	8	11
28" x 12"	28" x 12.75"	19	8	8	11
24" x 20"	24" x 20"	19	8	8	9
24" x 18"	24" x 18"	19	8	8	9
24" x 16"	24" x 16"	19	8	8	9
24" x 14"	24" x 14"	19	8	8	9
24" x 12"	24" x 12.75"	19	8	8	9

*NOTE: EDR RECORDED IS THE THICKER WE OFFER; FOR EXAMPLE: EDR 11 MEANS THE PIECE WAS MADE WITH DR 9 PIPE, THEREFORE , THINNER EDR'S ARE ALSO AVAILABLE
YOU CAN CONSULT THE ACTUAL WALL THICKNESS FOR EACH SIZE IN THE ANNEX i AND II, PLEASE REMEMBER FOR AN EDR 9 YOU MUST CONSULT THE DR 7; EDR 11 CONSULT DR 9 PIPE WALL THICKNESS.
OTHER DR´s OR DIAMETERS NOT INCLUDED, PLEASE CONTACT OUR TKP SALES REPRESENTATIVE

CONCENTRIC REDUCTION

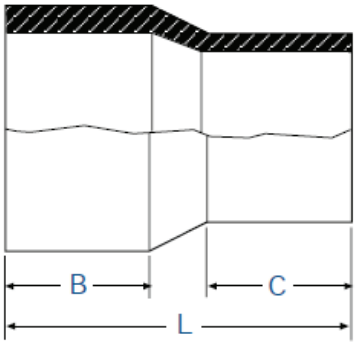

SIZE	OUTSIDE DIAMETER	DIMENSIONS			
		L	B	C	EDR
24" x 10"	24" x 10.75"	19	8	8	9
24" x 8"	24" x 8.625"	19	8	8	9
20" x 18"	20" x 18"	19	8	8	9
20" x 16"	20" x 16"	19	8	8	9
20" x 14"	20" x 14"	19	8	8	9
20" x 12"	20" x 12.75"	19	8	8	9
20" x 10"	20" x 10.75"	19	8	8	9
20" x 8"	20" x 8.625"	19	8	8	9
18" x 16"	18" x 16"	19	8	8	9
18" x 14"	18" x 14"	19	8	8	9
18" x 12"	18" x 12.75"	19	8	8	9
18" x 10"	18" x 10.75"	19	8	8	9
18" x 8"	18" x 8.625"	19	8	8	9
16" x 14"	16" x 14"	19	8	8	9
16" x 12"	16" x 12.75"	19	8	8	7
16" x 10"	16" x 10.75"	19	8	8	7
16" x 8"	16" x 8.625"	19	8	8	7
14" x 12"	14" x 12.75"	19	8	8	9
14" x 10"	14" x 10.75"	19	8	7	9
14" x 8"	14" x 8.625"	19	8	7	9

*NOTE: EDR RECORDED IS THE THICKER WE OFFER; FOR EXAMPLE: EDR 11 MEANS THE PIECE WAS MADE WITH DR 9 PIPE, THEREFORE , THINNER EDR'S ARE ALSO AVAILABLE
YOU CAN CONSULT THE ACTUAL WALL THICKNESS FOR EACH SIZE IN THE ANNEX i AND II, PLEASE REMEMBER
FOR AN EDR 9 YOU MUST CONSULT THE DR 7; EDR 11 CONSULT DR 9 PIPE WALL THICKNESS.
OTHER DR´s OR DIAMETERS NOT INCLUDED, PLEASE CONTACT OUR TKP SALES REPRESENTATIVE

SPECIAL PIECES

BLIND FLANGES

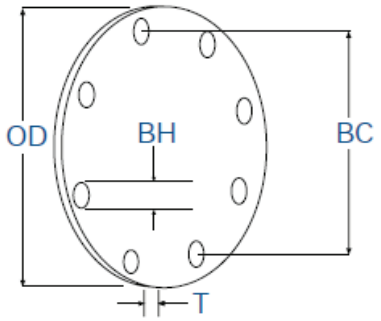

SIZE	OD	BH	BC
8"	13.5	0.875	11.75
10"	16	1	14.25
12"	19	1	17
14"	21	1.125	18.75
16"	23.5	1.125	21.25
18"	25	1.25	22.75
20"	27.5	1.25	25
22"	29.5	1.375	27.25
24"	32	1.375	29.5
28"	36.5	1.375	34
30"	38.75	1.625	36
32"	41.75	1.625	38.5
36"	46	1.625	42.75
42"	53	1.625	49.5
48"	59.5	1.625	56

Blind flanges from 8 "to 48" are offered in different thicknesses (t) for DR 11 (160 psi), DR 17 (100 psi) upon request. other diameters or DR's, please consult your TKP sales representative.

ECCENTRIC REDUCTIONS

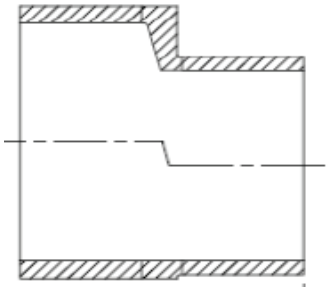

Eccentric reductions are available upon request. Please consult your TKP sales representative.

CROSS

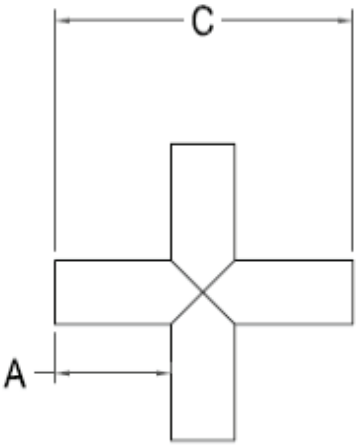

DIAM. IPS	A	C
8"	7.75	24.188
10"	6.5	23.75
12"	8	27.75
14"	8	30
16"	8	32
18"	14	46
20"	14	48
22"	14	50
24"	14	52
28"	14	56
30"	14	58
32"	14	60
36"	20	76

Cross are available upon request from 8 "-28" in DR 9, 8 "- 36" in DR 11.17, please consult your sales representative.

Appendix I: TKP IPS pipe

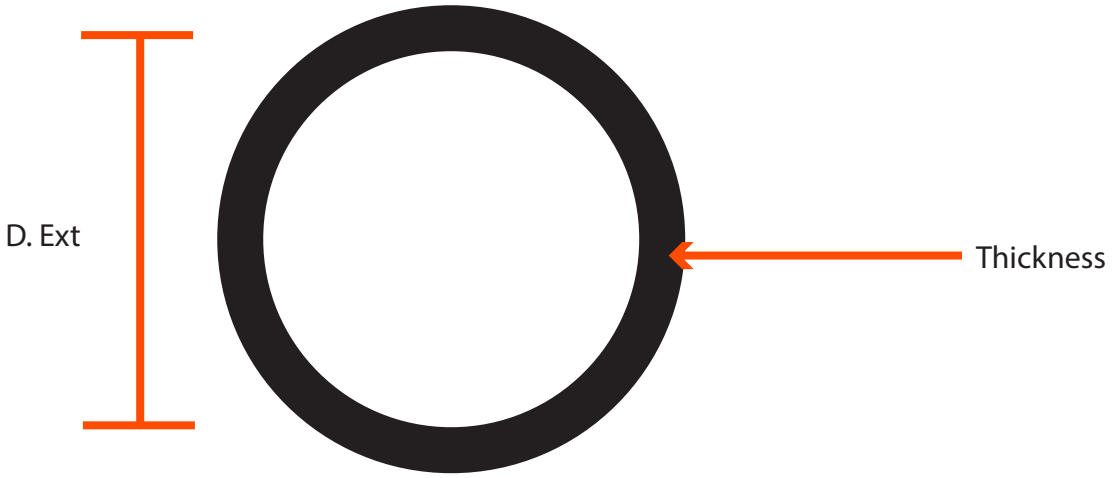

			RD 5	RD 7	RD7.3	RD9	RD11	RD13.5
Nominal Diameter	D. Ext. Inch	Tol. (+/-)	Thickness inch	Thickness inch	Thickness inch	Thickness inch	Thickness inch	Thickness inch
3"	3.500	0.008		0.500	0.480	0.390	0.319	0.260
4"	4.500	0.020		0.642	0.618	0.500	0.409	0.335
6"	6.625	0.031		0.945	0.909	0.736	0.602	0.492
8"	8.625	0.039	1.725	1.232	1.181	0.957	0.783	0.638
10"	10.752	0.047	2.150	1.535	1.472	1.193	0.976	0.795
12"	12.748	0.055	2.550	1.823	1.748	1.417	1.157	0.945
14"	14.000	0.063		2.000	1.917	1.555	1.272	1.035
16"	16.000	0.071	3.200	2.287	2.197	1.780	1.457	1.185
18"	18.000	0.083		2.571	2.465	2.000	1.638	1.335
20"	20.000	0.091		2.858	2.744	2.220	1.819	1.480
22"	22.000	0.098		3.142	3.016	2.445	2.000	1.630
24"	24.000	0.106		3.429	3.287	2.665	2.181	1.780
26"	26.000	0.118				2.890	2.362	1.925
28"	28.000	0.126				3.110	2.543	2.075
30"	30.000	0.134				3.335	2.728	2.220
32"	32.000	0.146				3.555	2.909	2.370
34"	34.000	0.154					3.091	2.520
36"	36.000	0.161					3.272	2.665
40"	40.000	0.181					3.638	2.965
42"	42.000	0.189						3.110
48"	48.000	0.217						3.555

WALL THICKNESS ARE MINIMUM

NOTE: THE FITTINGS IN DR 5 ARE AVAILABLE ONLY FOR 8”,10”,12” Y 16” IPS;
FITTINGS DR 5 ARE NOT AVAILABLE IN SYSTEM EDR

Appendix II: TKP IPS pipe

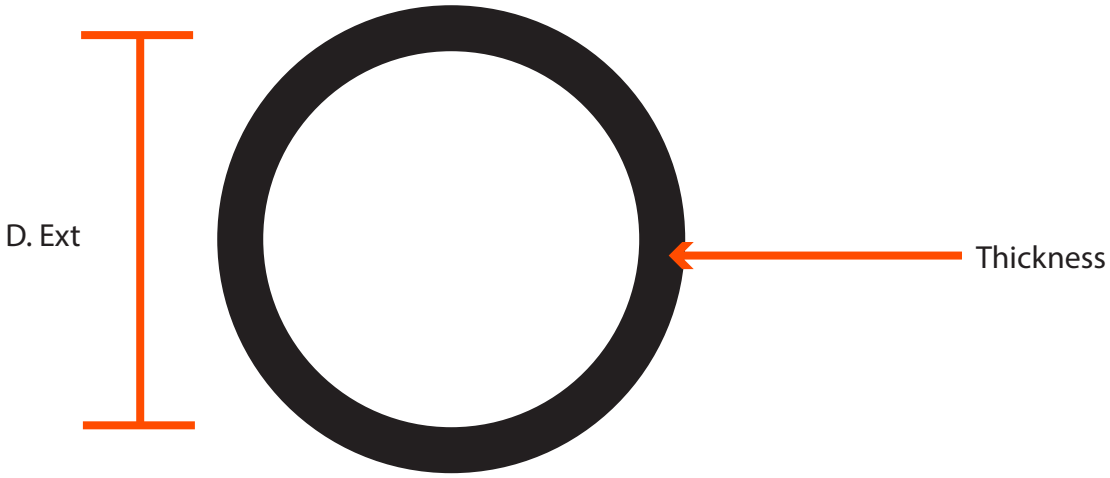

			RD15.5	R17	RD21	RD26	RD32.5	RD41
Nominal Diameter	D. Ext. Inch	Tol (+/-)	Thickness inch	Thickness inch	Thickness inch	Thickness inch	Thickness inch	Thickness inch
3"	3.500	0.008	0.224	0.205	0.165	0.134	0.106	
4"	4.500	0.020	0.291	0.264	0.213	0.173	0.138	0.110
6"	6.625	0.031	0.425	0.390	0.315	0.256	0.205	0.161
8"	8.625	0.039	0.555	0.508	0.409	0.331	0.264	0.209
10"	10.752	0.047	0.693	0.634	0.512	0.413	0.331	0.264
12"	12.748	0.055	0.823	0.752	0.606	0.492	0.394	0.311
14"	14.000	0.063	0.902	0.823	0.665	0.539	0.429	0.343
16"	16.000	0.071	1.031	0.941	0.764	0.614	0.492	0.390
18"	18.000	0.083	1.161	1.059	0.858	0.693	0.555	0.441
20"	20.000	0.091	1.291	1.177	0.953	0.768	0.614	0.488
22"	22.000	0.098	1.417	1.295	1.047	0.846	0.677	0.535
24"	24.000	0.106	1.547	1.413	1.142	0.921	0.736	0.587
26"	26.000	0.118	1.677	1.528	1.236	1.000	0.799	0.634
28"	28.000	0.126	1.807	1.646	1.335	1.079	0.862	0.681
30"	30.000	0.134	1.933	1.764	1.429	1.154	0.921	0.732
32"	32.000	0.146	2.067	1.854	1.524	1.232	0.984	0.780
34"	34.000	0.154	2.193	2.000	1.618	1.307	1.047	0.831
36"	36.000	0.161	2.323	0.937	1.713	1.386	1.106	0.878
40"	40.000	0.181	2.579	2.354	1.906	1.539	1.232	0.976
42"	42.000	0.189	2.709	2.472	2.000	1.614	1.291	1.024
48"	48.000	0.217	3.098	2.823	2.287	1.846	1.476	1.169

Contact us,
we will be ready to help you

Offices

9801 Westheimer Rd. Suite 302
Houston, Texas
77042, USA

+1 (713) 917 6800

Headquarter Plant

Av. Tecnológico #483
Monterrey Technology Park
Ciénega de Flores, N.L.
C.P. 65550, México

+52 (81) 8384 7310

info@tkp.mx

QUALITY SYSTEM CERTIFICATION
DNV·GL
ISO 9001

WWW.TKP.MX

Follow us on our social networks!

/ Tkp inc. - Teknipipe & Supplies

@fimex.tkp